PCB Information Pack IPN 403-01639-03
Options Parts List 220-01639-03

Parts List

Ref	IPN	Description
Q1	000-00010-66	XSTR BC337 NPN AF PWR TO92
Q2	000-00010-66	XSTR BC337 NPN AF PWR TO92
R1	030-55220-20	RES FILM AI 22K 5% 0.4W 4X1.6
R2	030-55100-20	RES FILM AI 10K 5% 0.4W 4X1.6
S13	219-02070-00	LOOM 12W T2K OPT BD
S14	219-02071-00	LOOM 16W T2K OPT BD
S21	240-00010-58	SKT 15W D-RANGE ANGLE PCB MNT

Mechanical & Miscellaneous Parts

IPN	Description
220-01639-03	PCB T2K LO-TIER OPTIONS BRD
240-06010-25	COVER PLUG INSULATING 230V
345-00051-00	SCRW PTDG 30*06 P/TORX BZ LUBE
354-01041-00	FASTENER SCREWLOCK KIT 4-40

Grid Reference Index

Device	PCB	Circuit
1	1:P3	1-J9
2	1:P3	1-J9
3	1:Q3	1-J8
4	1:Q3	1-J8
5	1:R3	1-J8
6	1:N3	1-J7
7	1:P3	1-J7
8	1:Q3	1-J7
9	1:R3	1-J6
10	1:R3	1-J6
11	1:N3	1-J6
12	1:N3	1-J5
13	1:S3	1-J5
14	1:S3	1-J5
15	1:S3	1-J5
16	1:T4	2-A2
C1	1:P3	1-K9
C2	1:P3	1-K9
C3	1:Q3	1-K8
C5	1:R3	1-K8
C6	1:N3	1-K7
C7	1:P3	1-K7
C8	1:Q3	1-K7
C9	1:R3	1-K6
C10	1:R3	1-K6
C11	1:N3	1-K6
C12	1:N3	1-K5
C13	1:S3	1-K5
C14	1:S3	1-K5
C15	1:S3	1-K4
C16	1:K2	1-H3
C17	1:L2	1-J2
F1	2:E1	1-D9
LK2	1:E1	1-C4
LK3	1:L2	1-C5
LK4	1:L2	1-D4
P1	1:F3	1-B9
P2	1:G1	1-B8
P3	1:G1	1-B7
P4	1:H1	1-B6
P5	1:H1	1-B6
P6	1:H1	1-B5
P7	1:J1	1-B5
P8	1:J1	1-B5
P9	1:J1	1-B4
P10	1:N2	1-H7
P11	1:R2	1-H6
P12	1:N2	1-H5
P13	1:S2	1-H5
P15	1:R2	1-H6
P31	1:P2	1-J9
P32	1:P2	1-J9
P33	1:Q2	1-J8
P34	1:Q2	1-J8
P35	1:R2	1-J8
P36	1:N2	1-J7
P37	1:P2	1-J7
P38	1:Q2	1-J7
P39	1:R2	1-J6
P40	1:R2	1-J6
P41	1:N2	1-J6
P42	1:M2	1-J5
P43	1:S2	1-J5
P44	1:S2	1-J5
P45	1:S2	1-J5
P46	1:M3	1-G0
P47	1:M3	1-G0
P48	1:M2	1-G1
P49	1:M2	1-G1
P51	1:K1	1-B8
P52	1:K2	1-B7
P53	1:K2	1-B7
P54	1:K3	1-B6
P55	1:K2	1-B5
P56	1:K3	1-H7
P57	1:K3	1-H7
P58	1:E3	1-G4
P59	1:D1	1-G3
P60	1:E3	1-G2
P61	1:D1	1-G1

Device	PCB	Circuit
Q1	1:H4	1-D8
Q2	1:J4	1-E9
Q3	1:K2	1-J4
Q4	1:L2	1-H2
R1	1:G3	1-C8
R2	1:J3	1-D9
R3	1:L2	1-G5
R4	1:L3	1-G5
R5	1:K3	1-H4
R6	1:K2	1-J3
R7	1:L2	1-J2
R8	1:L2	1-H2
S13	1:C1	2-B1
S14	1:G1	2-D1
S15	1:L1	2-F1
S21	1:Q4	2-G1
S153	1:K1	1-K3
S156	1:L1	1-K3
S157	1:L1	1-K2
S158	1:L1	1-K2
S159	1:L1	1-K2
S1510	1:L1	1-K2
S1511	1:M1	1-K2
S1512	1:M1	1-K1
S1513	1:M1	1-K1
S1514	1:M1	1-K1
S1515	1:M1	1-K1
S1516	1:M1	1-K1
T1	1:A4	2-A7
T2	1:A4	2-B7
T3	1:A4	2-B7
T4	1:B4	2-C7
T5	1:B4	2-C7
T6	1:B4	2-D7
T7	1:C4	2-D7
T8	1:C4	2-E7
T9	1:C4	2-E7
T10	1:D4	2-F7
T11	1:D4	2-F7
T12	1:D4	2-G7
T13	1:E4	2-G7
T14	1:A2	2-A5
T15	1:A2	2-B5
T16	1:A2	2-B5
T17	1:B2	2-C5
T18	1:B2	2-C5
T19	1:B2	2-D5
T20	1:C2	2-D5
T21	1:C2	2-E5
T22	1:C2	2-E5
T23	1:D2	2-F5
T24	1:D2	2-F5
T25	1:D2	2-G5
T26	1:E2	2-G5
T27	1:G4	2-H7
T28	1:G4	2-J7
T29	1:H4	2-J7
T30	1:H4	2-K7
T31	1:H4	2-K7
T32	1:J4	2-L7
T33	1:J4	2-L7
T34	1:G2	2-H5
T35	1:G2	2-J5
T36	1:H2	2-J5
T37	1:H2	2-K5
T38	1:H2	2-K5
T39	1:J2	2-L5
T40	1:J2	2-L5
T41	1:A4	2-B8
T42	1:B4	2-D8
T43	1:D4	2-F8
T44	1:G4	2-H7

PCB Information Pack Tait T2000

PCB Layout – Options

Parts List 220-01639-03

IPN 403-01639-03

Parts List Amendments

This document can be printed on A3 as single-sided, double-sided, unfolded or z-folded.

 Copyright Tait Electronics Limited

PCB Layouts – Top & Bottom

PCB Information Pack IPN 403-01639-03
Options Parts List 220-01639-03

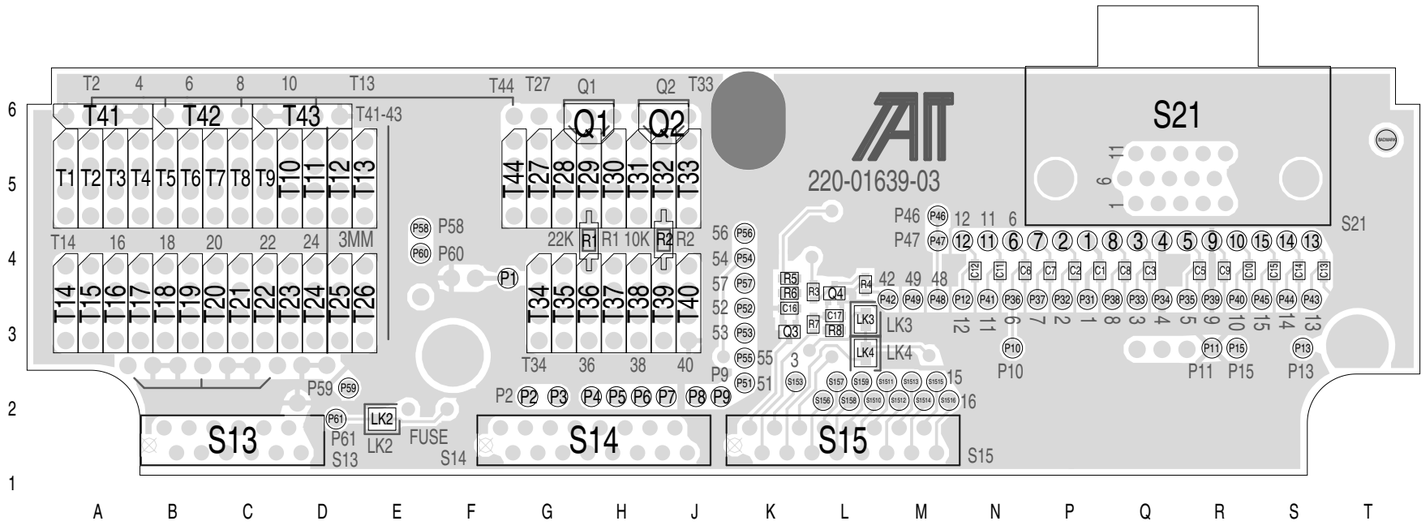

TAIT ELECTRONICS
IPN: 220-01639-03 ISS: A ID: 1.TA DATE: 25 Sep 2000
T201X PCB LAYOUT - TOP SIDE
Scale:1.6:1 ; Rotation: 270 degrees

Top Side

Bottom Side

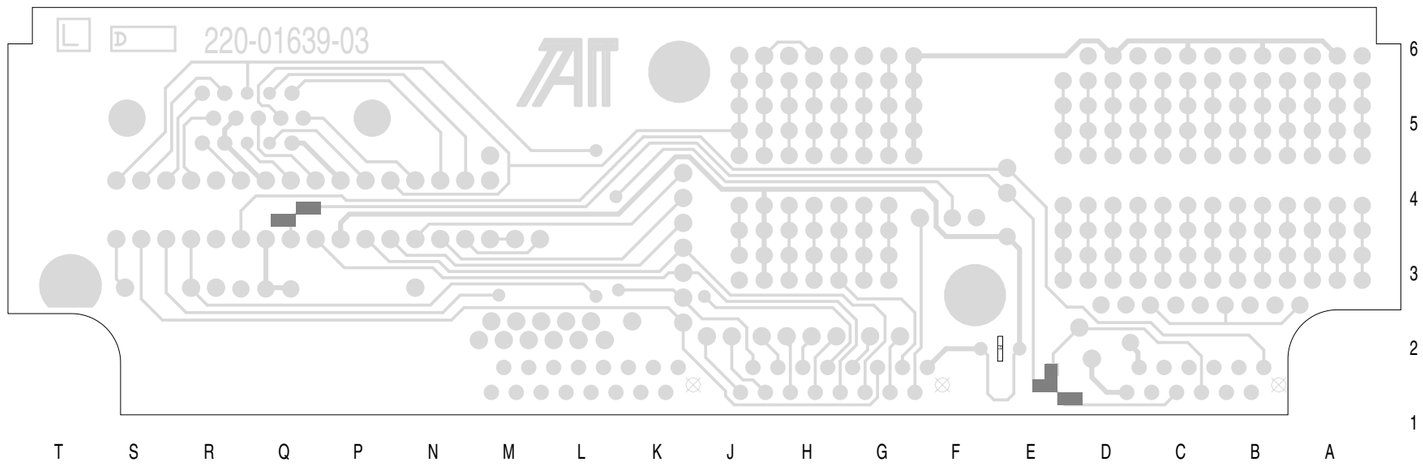

ECTRONICS
IPN: 220-01639-03 ISS: A ID: 2.BA DATE: 25 Sep 2000
T201X PCB LAYOUT - BOTTOM SIDE
Scale:1.6:1 ; Rotation: 90 degrees

 Copyright Tait Electronics Limited

Schematic #1

PCB Information Pack IPN 403-01639-03
Options Parts List 220-01639-03

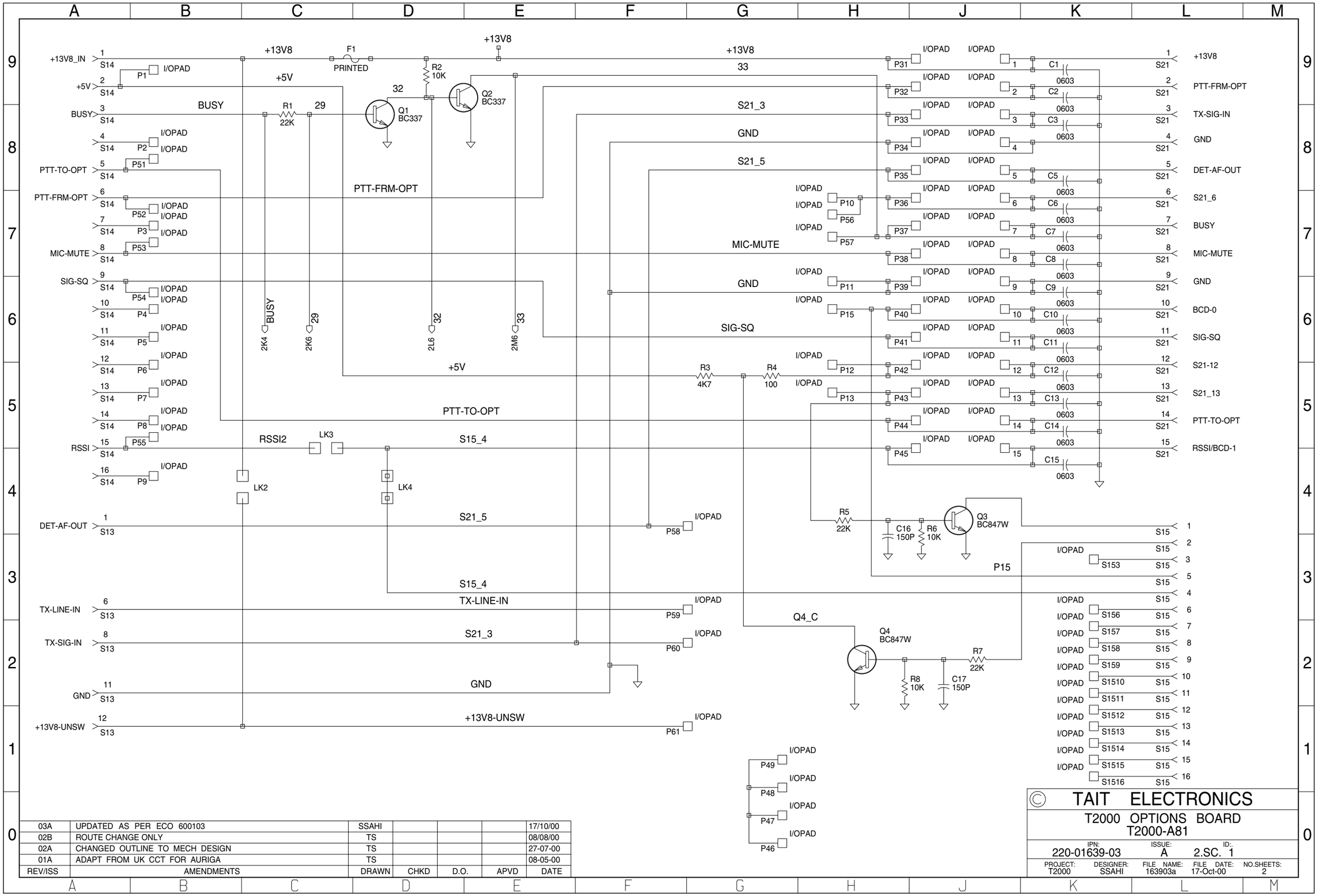

REV/ISS	AMENDMENTS	DRAWN	CHKD	D.O.	APVD	DATE
03A	UPDATED AS PER ECO 600103	SSAHI				17/10/00
02B	ROUTE CHANGE ONLY	TS				08/08/00
02A	CHANGED OUTLINE TO MECH DESIGN	TS				27-07-00
01A	ADAPT FROM UK CCT FOR AURIGA	TS				08-05-00

 Copyright Tait Electronics Limited Schematic #1

Schematic #2

PCB Information Pack IPN 403-01639-03
Options Parts List 220-01639-03

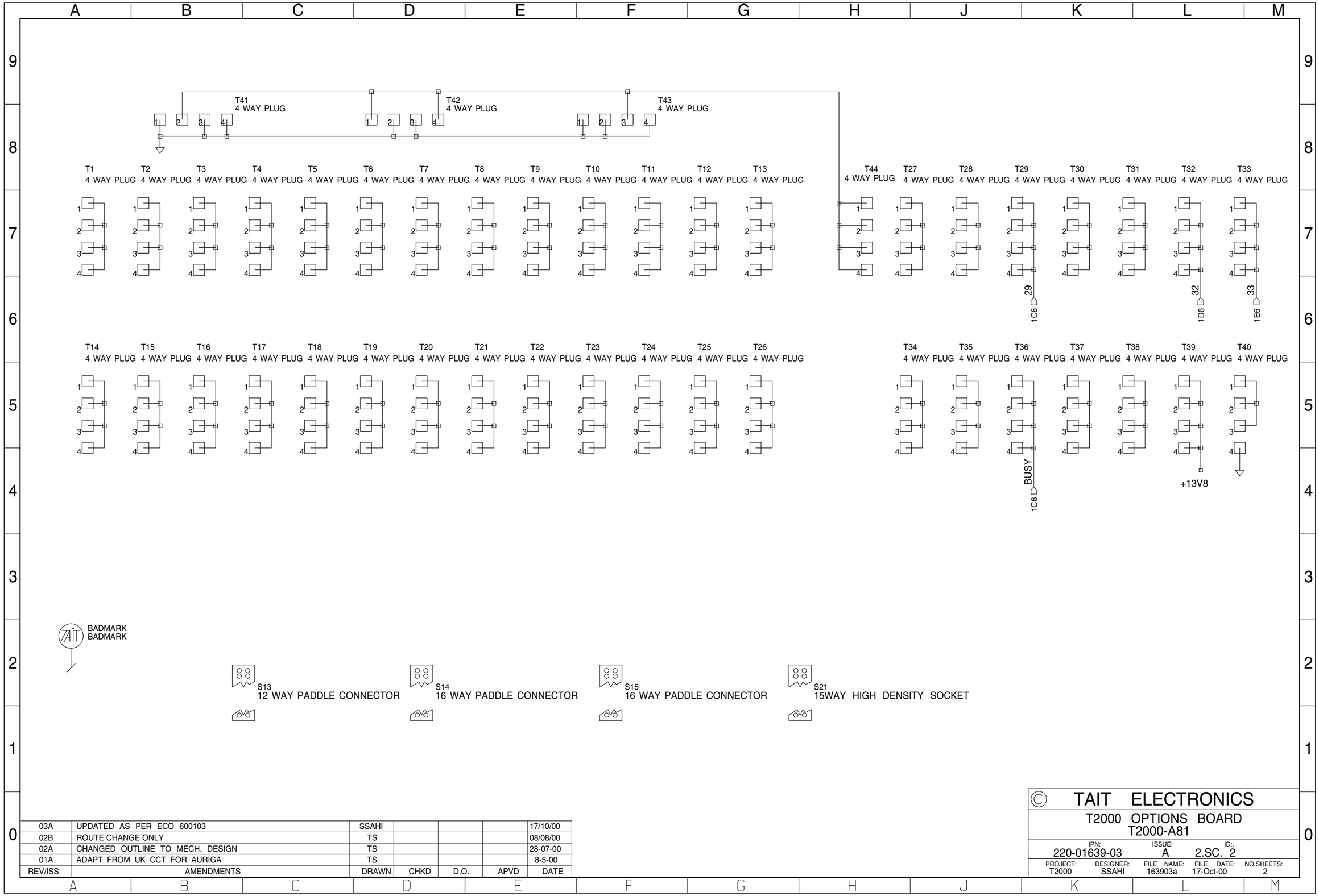

REV/ISS	AMENDMENTS	DRAWN	CHKD	D.O.	APVD	DATE
03A	UPDATED AS PER ECO 600103	SSAHI				17/10/00
02B	ROUTE CHANGE ONLY	TS				08/08/00
02A	CHANGED OUTLINE TO MECH. DESIGN	TS				28-07-00
01A	ADAPT FROM UK CCT FOR AURIGA	TS				8-5-00